Specification

ETS
ENTA SOURCE CO., LTD.

ETQC03S

40G QSFP+ to 4x10G SFP+ DAC Cable

Contact US

LINE@ @ets.online

087-412-2552

Features:

- Protocol agnostic support of 40GbE, QDR InfiniBand, SAS & Fibre Channel
- 10Gbps transfer rate per SFP+ channel (40 Gb/s aggregate)
- Compliant with SFF-8436 / SFF-8431
- Compliant with IEEE 802.3ba/ Infiniband QDR specifications
- Enhanced EMI/EMC performance
- Supports serial ID functionality thru EEPROM
- Passive cable assembly supports distances up to 7meters
- 30AWG to 24AWG cable sizes available
- RoHS compliant

Applications :

- Switches / Routers / HBAs/SAN,NIC cards
- Server & Storage Devices
- Data Center Networking
- Fiber Channel
- InfiniBand QDR/DDR
- 10Gbs/40Gbs Ethernet

Description:

QSFP + to 4SFP + Passive Direct Copper is a cost-effective, high-speed interconnect solution that allows cables toconnect QSFP + and SFP + switches and network devices without the need to upgrade an entire data center or storage array.Enables Customers to Interconnect Between 40G and 10G Devices (NIC / HBA / CNA, Switch Devices, and Servers).

Outline drawing :

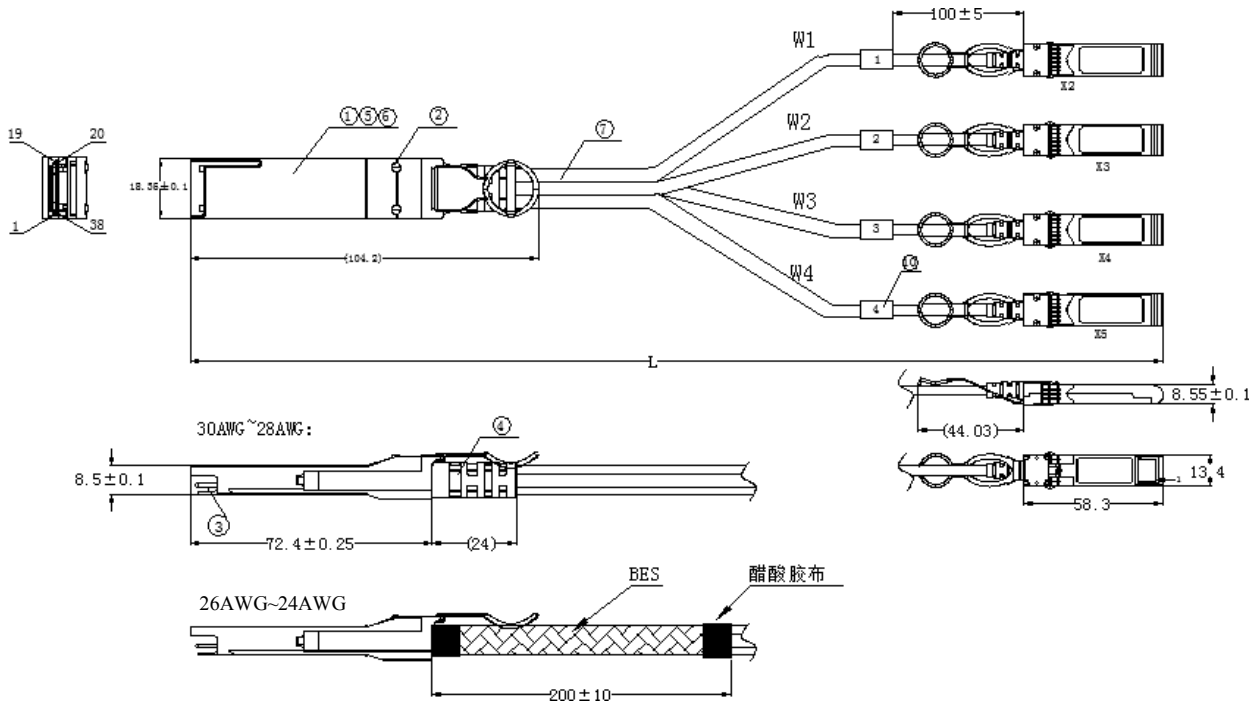

Wiring Diagram:

wire	Starting signal	Starting	End	End signal
W1	RX1+	X1.17	X2.18	TX1+
	RX1-	X1.18	X2.19	TX1-
	GND	X1.19	X2.20	GND
	TX1+	X1.36	X2.13	RX1+
	TX1-	X1.37	X2.12	RX1-
	GND	X1.38	X2.14	GND
W2	GND	X1.20	X3.20	GND
	RX2-	X1.21	X3.19	TX2-
	RX2+	X1.22	X3.18	TX2+
	GND	X1.1	X3.14	GND
	TX2-	X1.2	X3.12	RX2-
	TX2+	X1.3	X3.13	RX2+

wire	Starting signal	Starting	End	End signal
W3	RX3+	X1.14	X4.18	TX3+
	RX3-	X1.15	X4.19	TX3-
	GND	X1.16	X4.20	GND
	TX3+	X1.33	X4.13	RX3+
	TX3-	X1.34	X4.12	RX3-
	GND	X1.35	X4.14	GND
W4	GND	X1.23	X5.20	GND
	RX4-	X1.24	X5.19	TX4-
	RX4+	X1.25	X5.18	TX4+
	GND	X1.4	X5.14	GND
	TX4-	X1.5	X5.12	RX4-
	TX4+	X1.6	X5.13	RX4+

Electrical Performance：

Signal Integrity

（ITEM）		（REQUIREMENT）	（TEST CONDITION）
（Differential Impedance）	Cable Impedance	105+5/-5Ω	Rise time of 35ps (20 % - 80 %).
	Paddle Card Impedance	100±10Ω	
	Cable Termination Impedance	100±15Ω	
[Differential (Input/Output)Return loss S_{DD11}/S_{DD22}]		*Return loss(f)* ⩾ { 10 0.01⩽f < 4.1 ; $6.3-13\log_{10}(f/5.5)$ 4.1⩽f⩽11.1 } *Where* *f* *is the frequency in GHz* *Return loss(f)* *is the return loss at frequency f*	0.01GHz≤f≤11.1GHz SFF-8431 Rev.4.1
[Differential Insertion Loss (S_{DD21} Max.)]		(Differential InsertionLoss Max. For TPa to TPb Excluding Test fixture)	10MHz⩽f ⩽5GHz

F / AWG	0.6GHz	1.25GHz	2.5GHz	5.0GHz
30AWG(1m)Max.	2dB	3dB	4.5dB	7.5dB
30 AWG(2m)Max.	4dB	5dB	7dB	10dB
28AWG（3m)Max.	4dB	5.5dB	7.5 dB	12dB
26AWG(5m)Max.	5.5dB	7dB	10dB	16.0dB
24AWG(7m&10m)Max.	6.5dB	10dB	14dB	21dB

[MDNEXT(multiple disturber near-end crosstalk)]	⩾26dB	10MHz⩽f ⩽5GHz
[Insertion Loss Deviation]	$-0.7-0.2*10^{-3}f \le ILD \le 0.7+0.2*10^{-3}f$ (f is the frequency in MHz),	10MHz⩽f ⩽5GHz

1.1 （Other Electrical Performance）

（ITEM）	（REQUIREMENT）	（TEST CONDITON）
[Low Level Contact Resistance]	70milliohms Max. From initial.	EIA-364-23:Apply a maximum voltage of 20mV And a current of 100 mA.
Insulation Resistance	10Mohm(Min.)	EIA364-21:AC 300V 1minute
[Dielectric Withstanding Voltage]	DC 500V 1 minute disruptive discharge.	EIA-364-20:Apply a voltage of 500 VDC for 1minute between adjacent terminals And between adjacent terminals and ground.

Environment Performance

（ITEM）	（REQUIREMENT）	（TEST CONDITON）
[Operating Temp. Range]	-20°C to +75°C	Cable operating temperature range.
[Storage Temp. Range (in packed condition)]	-25°C to +65°C	Cable storage temperature range in packed condition.
[Thermal Cycling Non-Powered]	No evidence of physical damage	EIA-364-32D, Method A, -25 to 90C, 100 cycles, 15 min. dwells
[Salt Spraying]	48 hours salt spraying after shell corrosive area less than 5%.	EIA-364-26
Mixed Flowing Gas	Pass electrical tests per 3.1 after stressing. (For connector only)	EIA-364-35 Class II,14 days.
Temp. Life	No evidence of physical damage	EIA-364-17C w/ RH, Damp heat 90°C at 85% RH for 500 hours then return to ambient
Cable Cold Bend	4H,No evidence of physical damage	Condition: -20°C±2°C, mandrel diameter is 6 times the cable diameter.

Mechanical and Physical Characteristics

（ITEM）	（REQUIREMENT）	（TEST CONDITON）
Vibration	Pass electrical tests per 3.1 after stressing.	Clamp & vibrate per EIA-364-28E, TC-VII, test condition letter – D, 15 minutes in X, Y & Z axis.
Cable Flex	No evidence of physical damage	Flex cable 180° for 20 cycles (±90° from nominal position) at 12 cycles per minute with a 1.0kg load applied to the cable jacket. Flex in the boot area 90º in each direction from vertical. Per EIA-364-41C
Cable Plug Retention in Cage	90N Min. No evidence of physical damage	Force to be applied axially with no damage to cage. Per SFF 8661 Rev 2.1 Pull on cable jacket approximately 1 ft behind cable plug. No functional damage to cable plug below 90N. Per SFF-8432 Rev 5.0
Cable Retention in Plug	90N Min. No evidence of physical damage	Cable plug is fixtured with the bulk cable hanging vertically. A 90N axial load is applied (gradually) to the cable jacket and held for 1 minute. Per EIA-364-38B
Mechanical Shock	Pass electrical tests Per 3.1 after stressing.	Clamp and shock per EIA-364-27B, TC-G,3 times in 6 directions, 100g, 6ms.
Cable Plug Insertion	40N Max.(QSFP+) 18N Max.(SFP+)	Per SFF8432 Rev 5.0.
Cable plug Extraction	30N Max. (QSFP28) 12.5N Max. (SFP28)	Measure without the aid of any cage kick-out springs. Place axial load on de-latch to de-latch plug. Per SFF-8432 Rev 5.0.
Durability	50 cycles,No evidence of physical damage	EIA-364-09, perform plug &unplug cycles:Plug and receptacle mate rate: 250times/hour. 50times for QSFP28/SFP28 module (CONNECTOR TO PCB)

Revision record :

Date	version	change Description	Author
2021-09-28	V0	First release	Crystal

Order Information：

Rate	Part No.	Detail
40G QSFP - 4x10G SFP	ETQC03S	40G QSFP to 4*10G SFP+ DAC 3m
	ETQC05S	40G QSFP to 4*10G SFP+ DAC 5m
	ETQC07S	40G QSFP to 4*10G SFP+ DAC 7m

ENTA SOURCE reserves the right to make changes to the products or information contained herein without notice. No liability is assumed as a result of their use or application. No rights under any patent accompany the sale of any such products or information.
Published by ENTA SOURCE Co.,Ltd.
Copyright © ENTA SOURCE
All Rights Reserved